Mobile Sleeve, compact (Spider)

Component of the attachment devices Cantilever arms type AASS 1 and ASS 1
according to EN 795:2012 Type B and CEN/TS 16415:2017

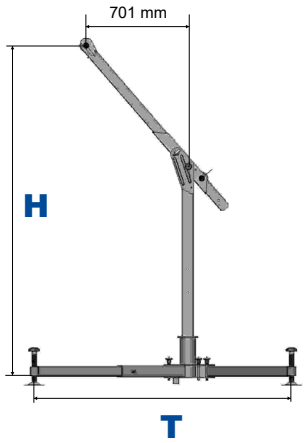

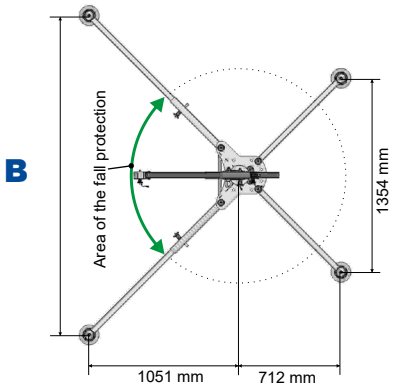

Example: Mobile sleeve, compact with cantilever arm ASS-1 and HRA height safety device

Product information:

Order No:	Height (H) (Incl. AASS 1 or ASS1)	Width (B)	Detph (T)	Weight
41-67	2276mm	2228 mm	1763mm	67 kg

Features:

Mobile sleeve compact, for IKAR Cantilever arms AASS 1 und ASS 1

- Specially developed for mobile use in the case of safety and rescue.
- Quick and easy to assemble or disassemble on site.
- Designed for entry and rescue from small rooms.
- Approved for 2 persons.
- Swivel and adjustable in case of lack of headroom.
- Ideal for work areas where frequent assembly and disassembly is required.
- Complete designed of stainless steel.
- Swivel range of the cantilever arm is 360 ° with a max. Load of 300 kg.

Mobile_Hülse_kompakt_23032023_EN

IKAR GmbH
Nobelstrasse 2
D-36041 Fulda
kontakt@ikar-gmbh.de
www.ikar-gmbh.de
Tel: +49 (0)661 - 22050